TECEdrainline/TECEdrainprofile FireStop EI 120 DN 50 – 6 600 06

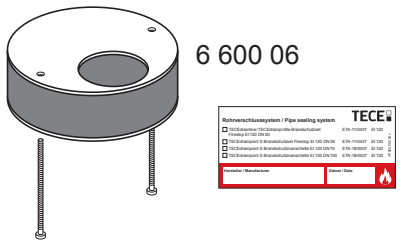

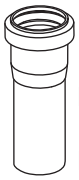

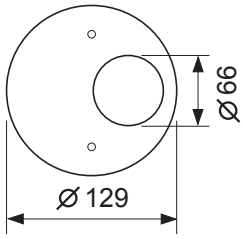

A

6 500 03
(...)

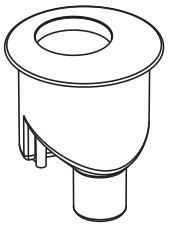

B

6 730 03
(...)

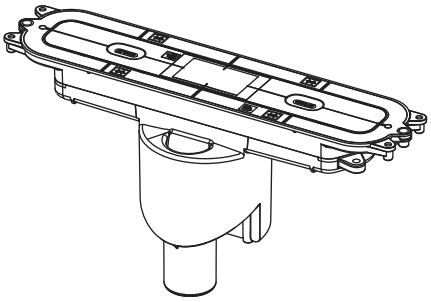

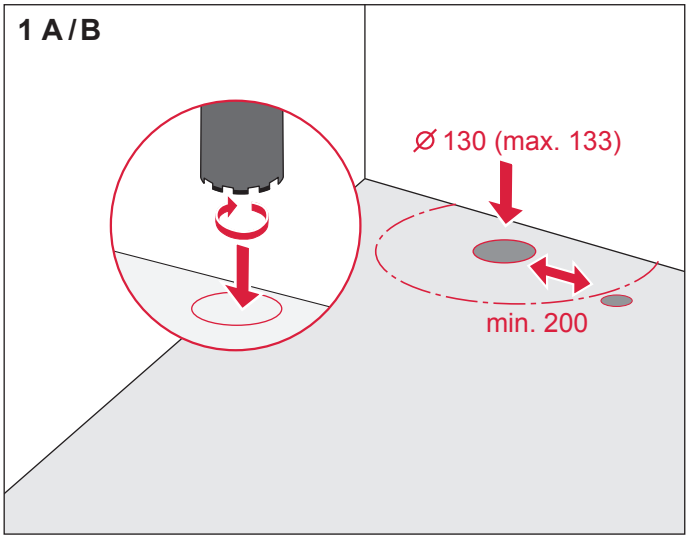

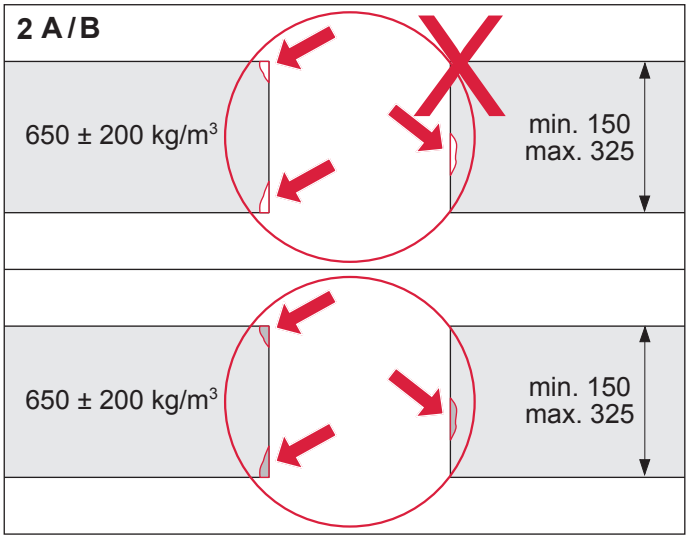

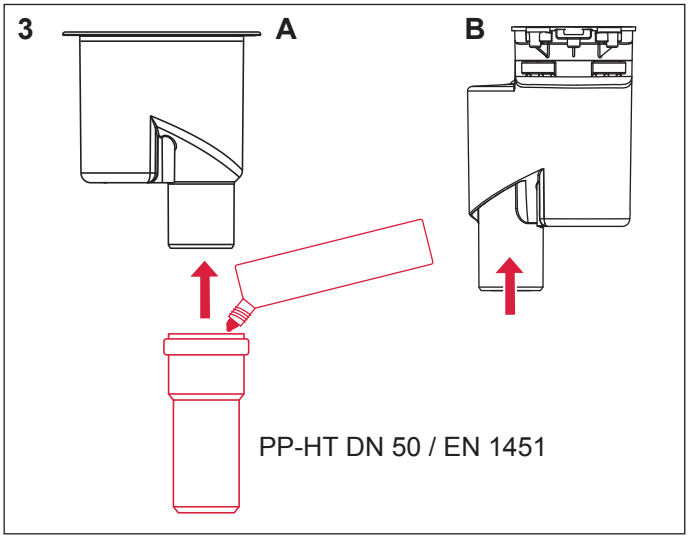

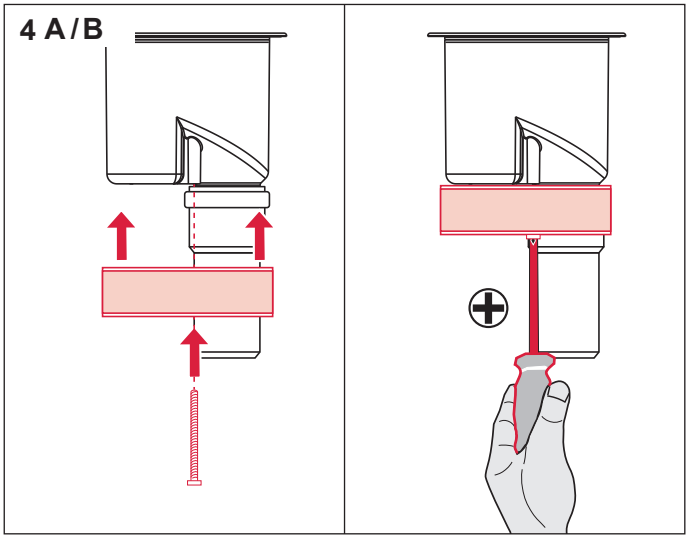

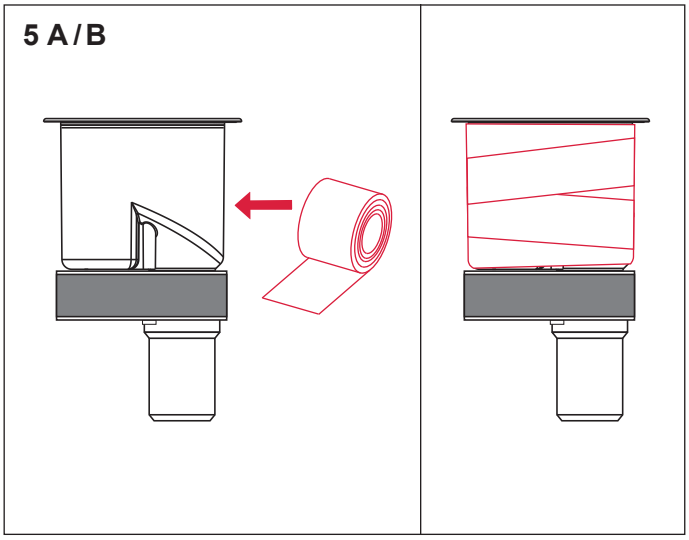
5 A / B

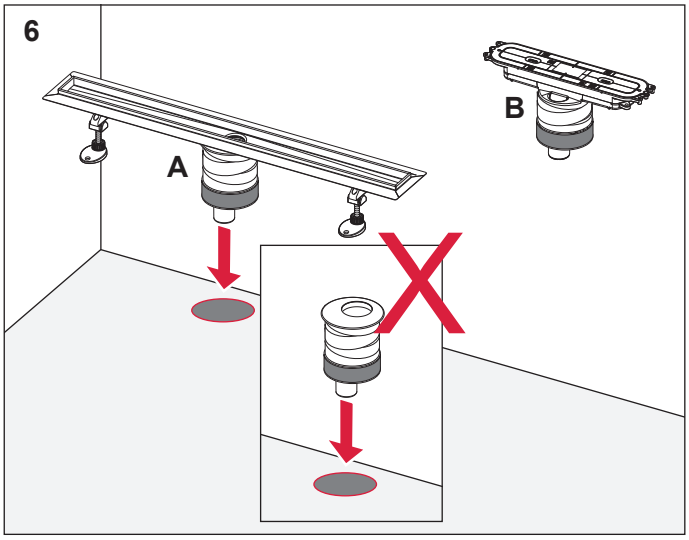
6
A
B

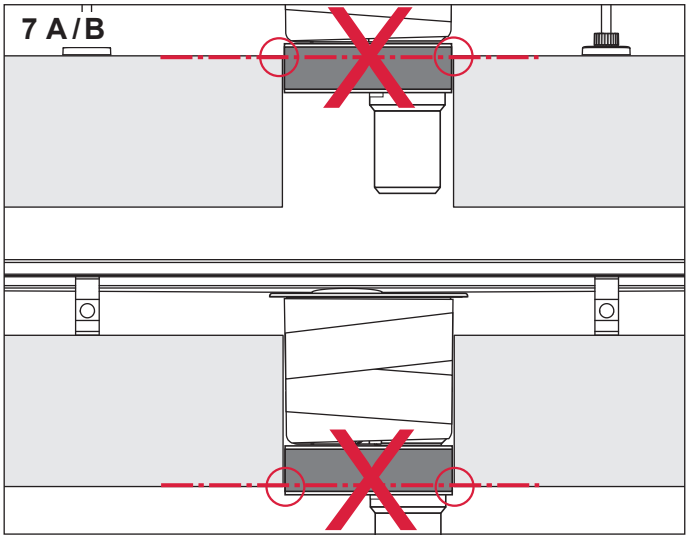
7 A / B

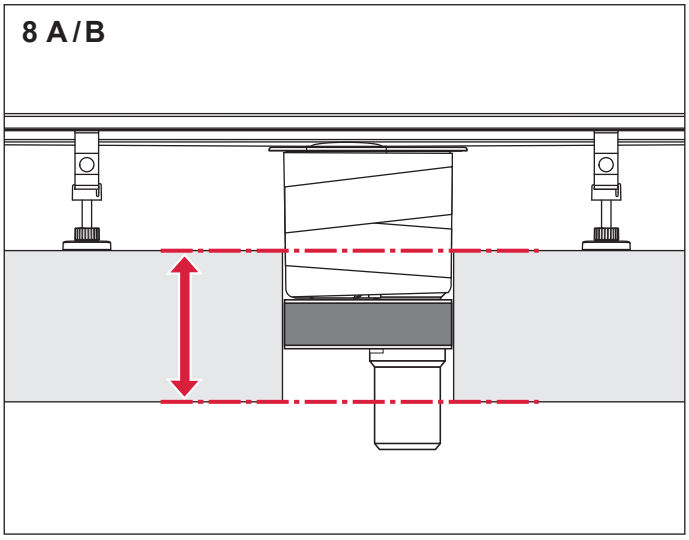
8 A / B

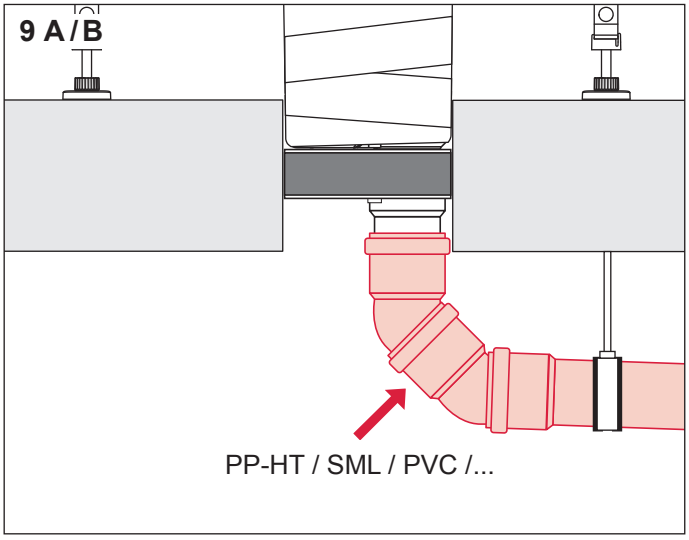
9 A / B
PP-HT / SML / PVC /...

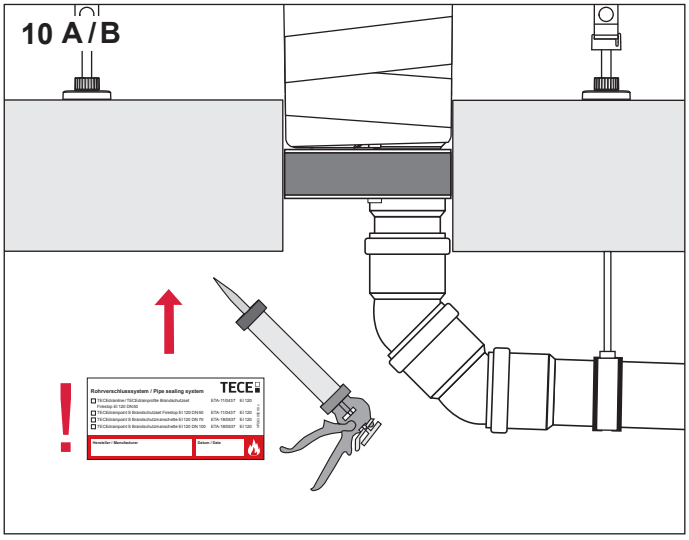
10 A / B
!
Rohrverschlusssystem / Pipe sealing system
TECE

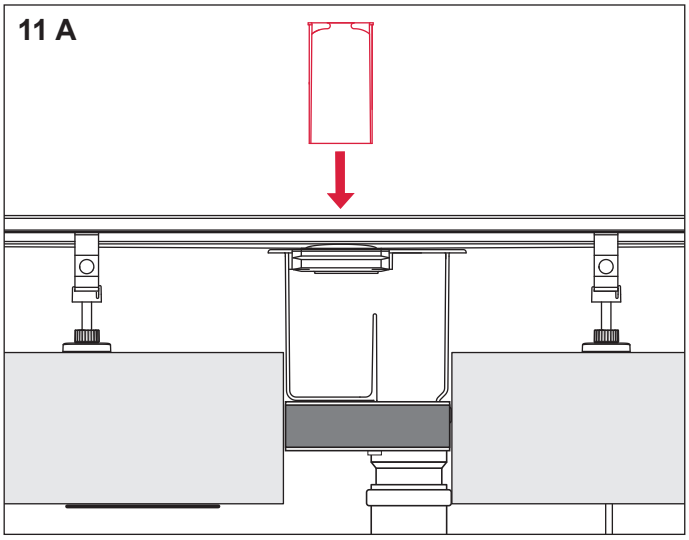
11 A

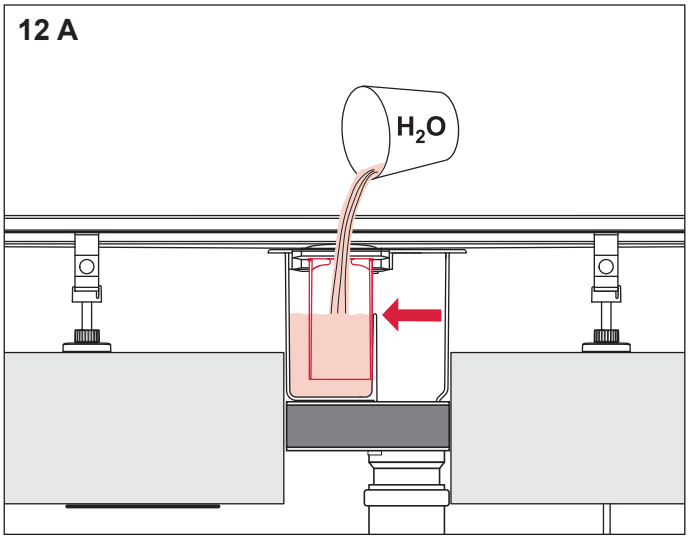
12 A
H_2O

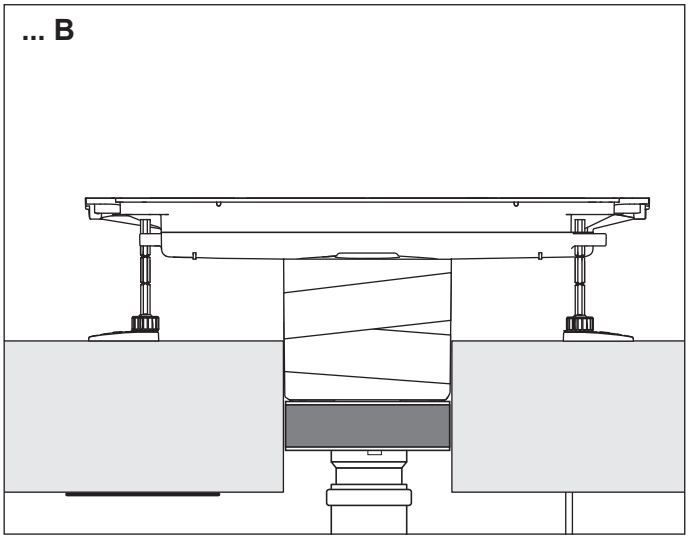
... B

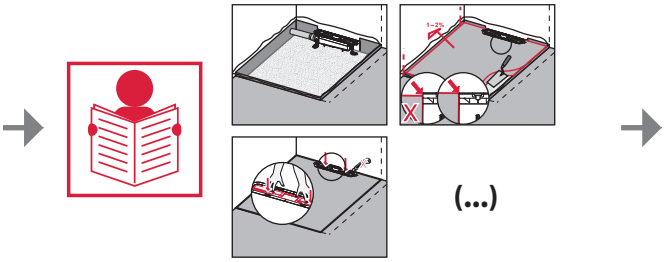
(...)

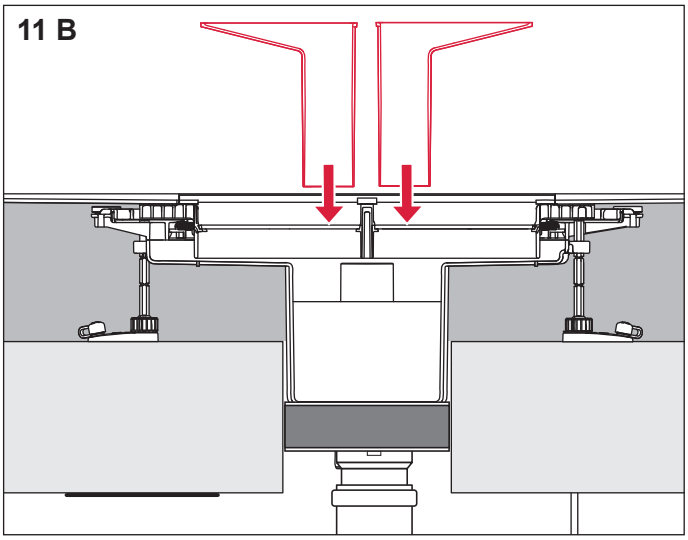
11 B

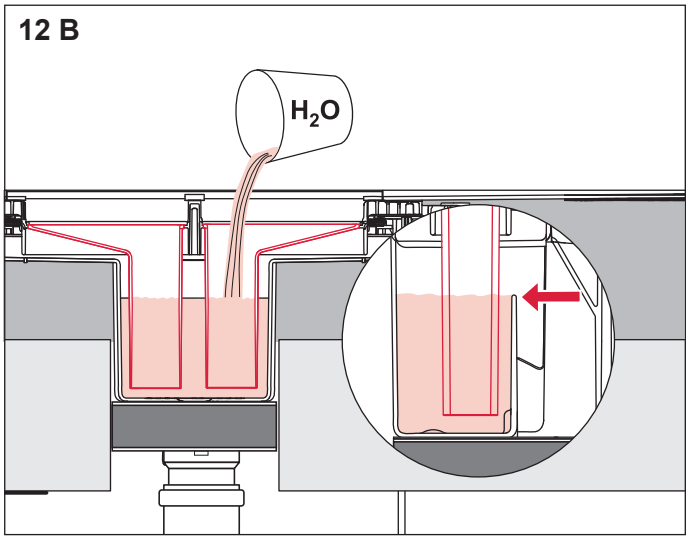
12 B
H_2O

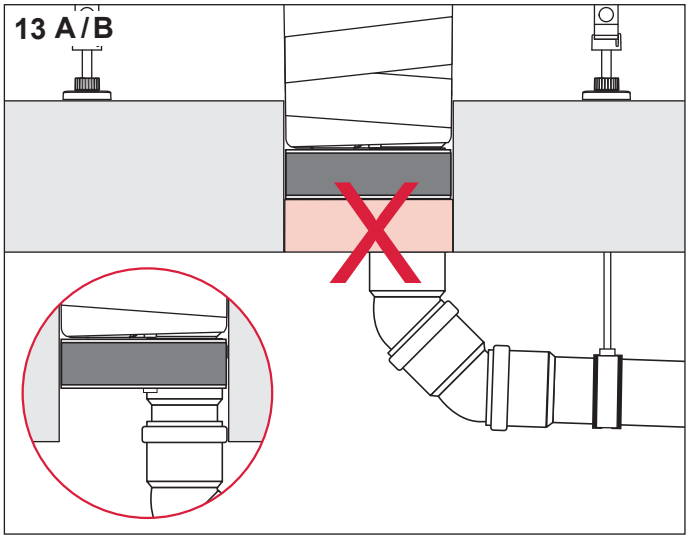

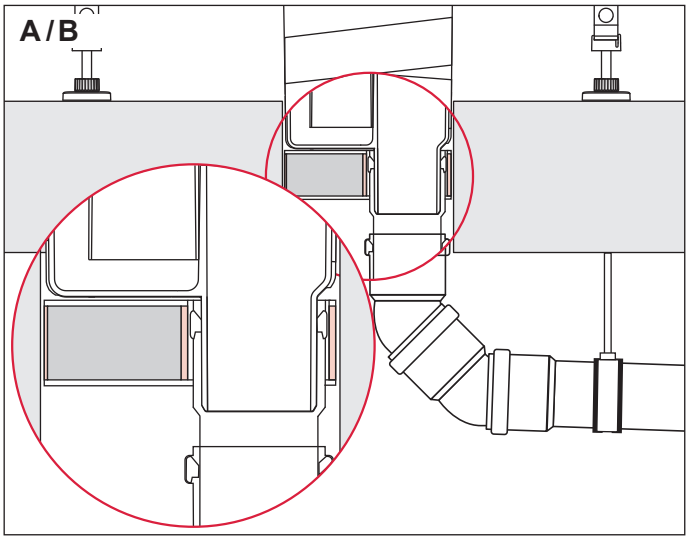

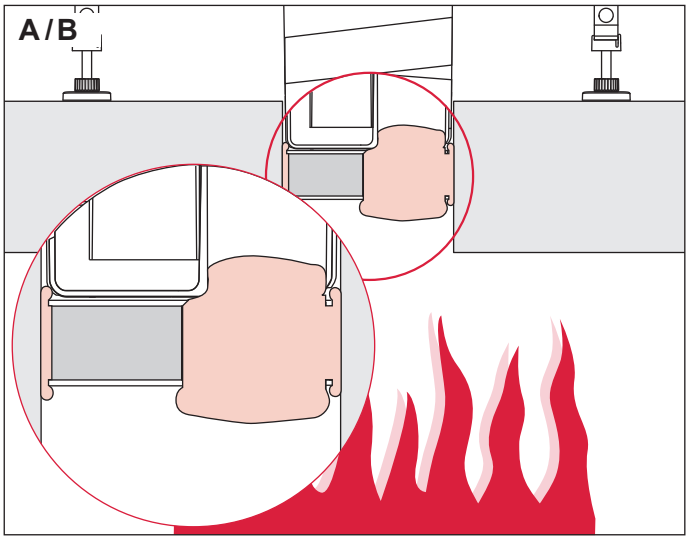

AT430 019 00 c